CSE-556 Internetworking
Fall 2002

Laboratory Assignment 5

Objective

The objective of this Laboratory Assignment is to get familiar with the Routing Information Protocol (RIP) which is a dynamic routing protocol for TCP/IP internetworks.

Theory

In Computer Lab No. 4 we created a network topology shown in the figure below:

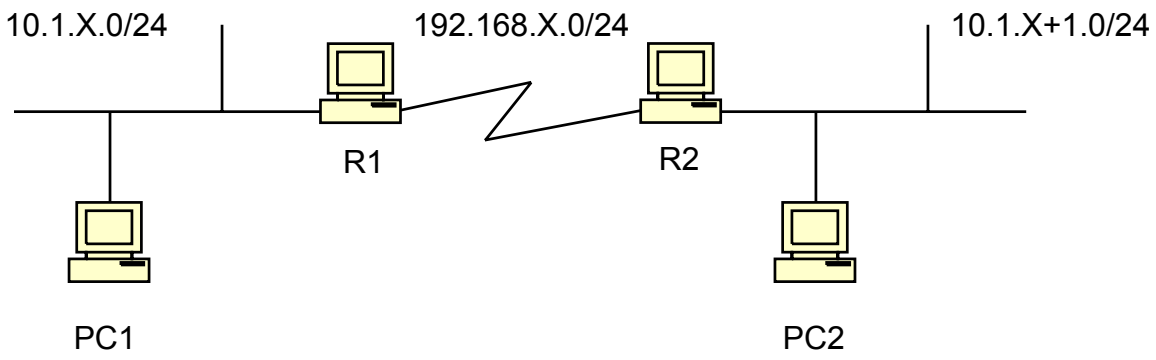

We established connectivity between all computers using static routes. The disadvantage of static routes is their manual re-configuration in case of a change in the topology of the internetwork or in case of failure of a link in the internetwork. Dynamic routing protocols allow for automatic update of router routing tables to adapt to changing network topology or link failures. The simplest dynamic routing protocol is the Routing Information Protocol or RIP. RIP is a Distance Vector routing protocol with a metric which is simply hop count. Due to this reason a RIP generated route might not be most optimal route.

You would need the following pieces of equipment/hardware:

1. Five Ethernet cross-over cables
2. One Null Modem Serial Cable
3. Four PCs equipped with two Ethernet NICs each and two PC equipped with a single Ethernet NIC each

Please note the following:

1. Routers are running Red Hat Linux 7.2 with ZEBRA routing package
2. PC1 and PC2 can be running any desktop operating system (Windows 95/98/NT/2000/XP, Linux)

Lab Assignment

1. Create the network topology shown in the figure below. Enable a PPP link between R1 and R2. Install ZEBRA dynamic routing protocol package on R1 and Windows NT RIP service on R2. See if the PC1 can ping PC2. Examine the routing tables of each router and note down what you see.

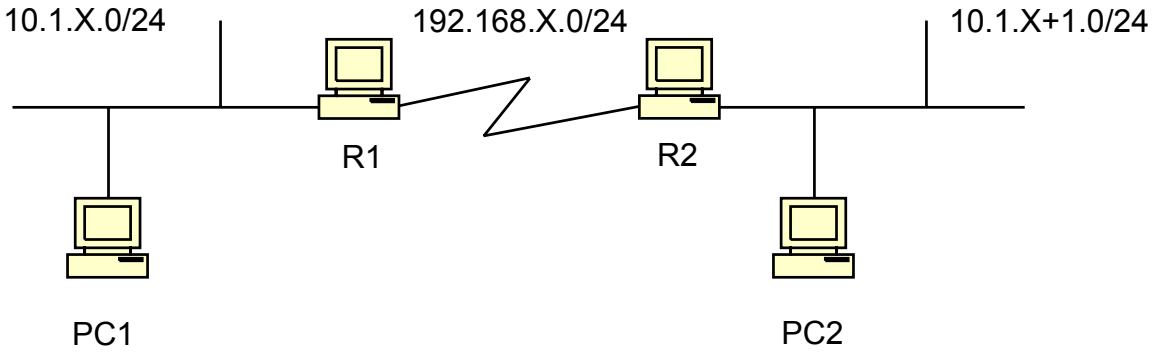

2. Establish the network topology shown in the figure below:

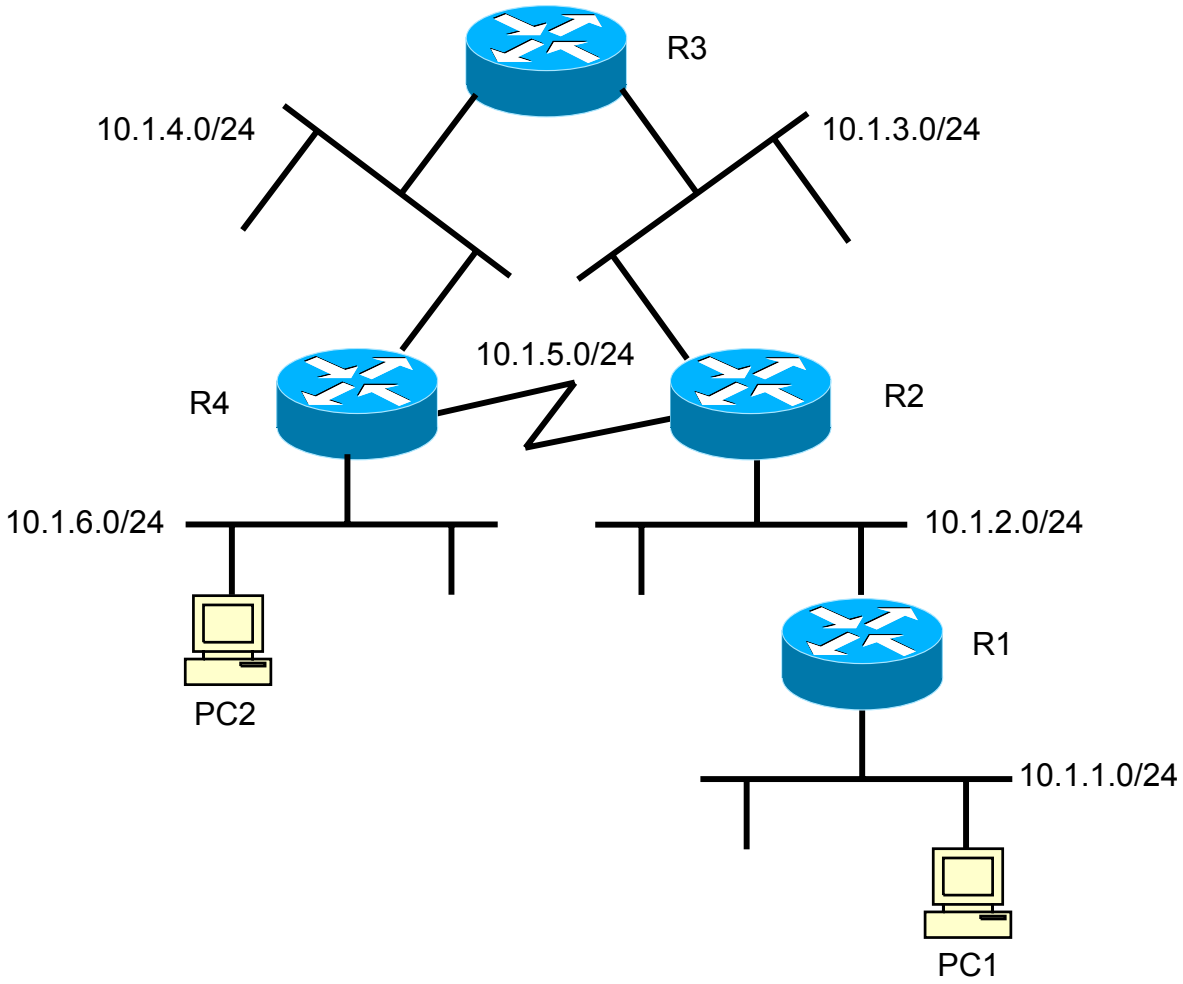

3. Enable connectivity between PC1 and PC2 by using RIP on all routers and specifying default gateway on each PC. List the sequence of steps under taken by you to achieve this task.

4. Now do a traceroute between PC1 and PC2. Explain what you see.

5. Now do a file transfer between PC1 and PC2 for a file bigger than 2 MB. Note down the time it took to transfer the file. Justify the time taken based on the data rates available on the intermediate data links.

6. Now disconnect the serial link between R2 and R4 and do the same file transfer between PC 1 and PC2 again. How much time did it take this time? Explain the difference in time.

7. On PC2 capture a RIP packet and draw its picture.

Questions

1. What port does RIP use? Is it a UDP port or TCP port?

2. What metric does RIP use? How is the metric used to indicate and unreachable network?

3. What is the update period for RIP?

4. How many RIP updates will be missed before a route entry will be marked as unreachable?

5. What is the multicast address used by RIP V2?